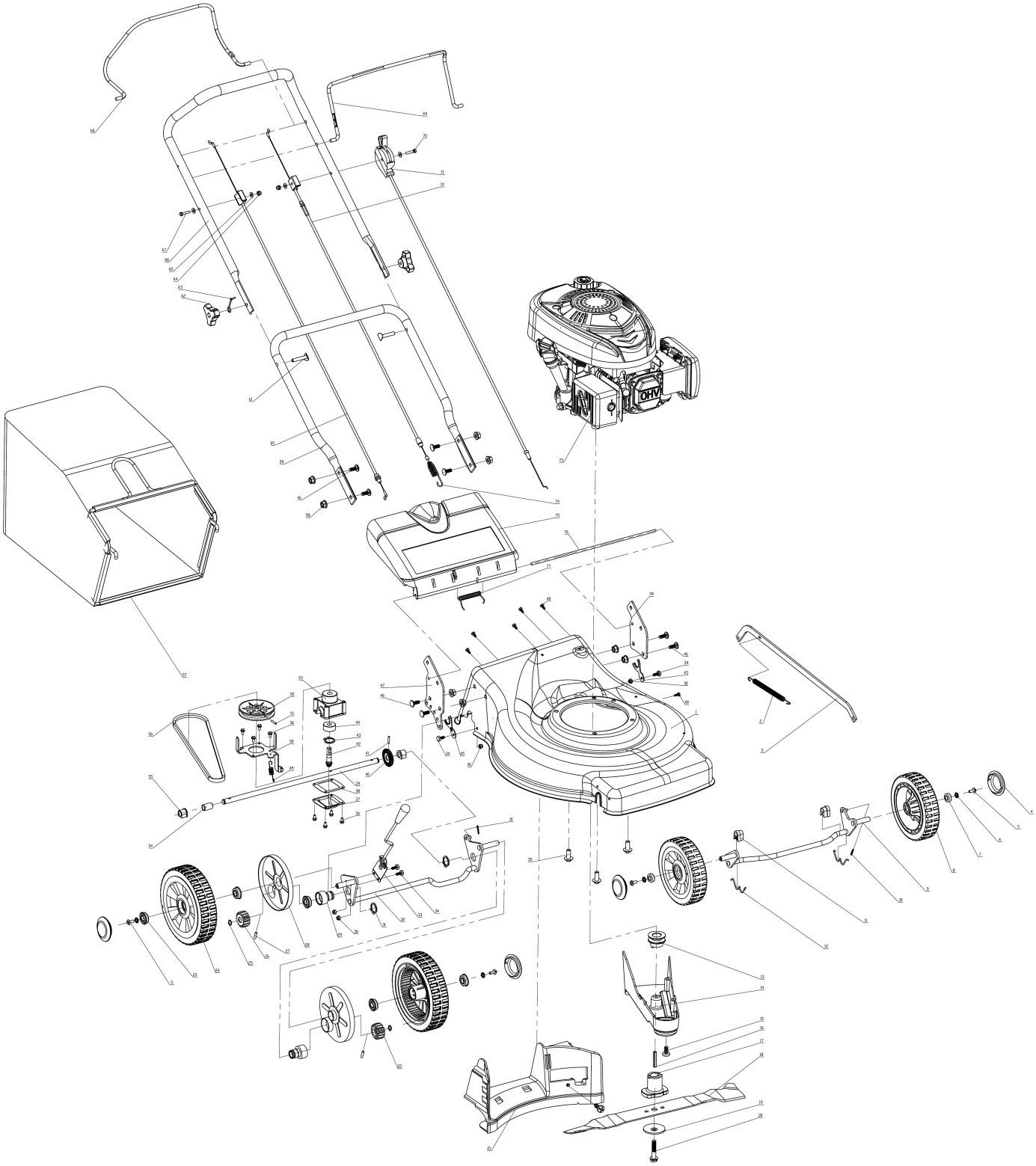
OHV